## SPECIFICATIONS

(Typical values for batteries stored at 20℃ for one year)

| | |
|---|---|
| Nominal Capacity (At 1mA/20℃/68°F/2.0V Cut-Off) | 1.65 Ah |
| Open Circuit Voltage (At 20℃/68°F) | 3.67 V |
| Nominal Voltage (At 1mA/20℃/68°F) | 3.6 V |
| Maximum Continuous Current | 60 mA |
| Maximum Pulse Current Capability | 150 mA |
| Operating Temperature Range | -55 ~ 85 ℃ |
| Weight | 11.3 g (0.4oz) |
| Anode Surface Area | 9.7 cm² |
| Volume | 5.5 cm³ |
| Diameter (Max) | 14.5 mm |
| Height (Max) | 33.5 mm |

DIMENSIONS IN MM

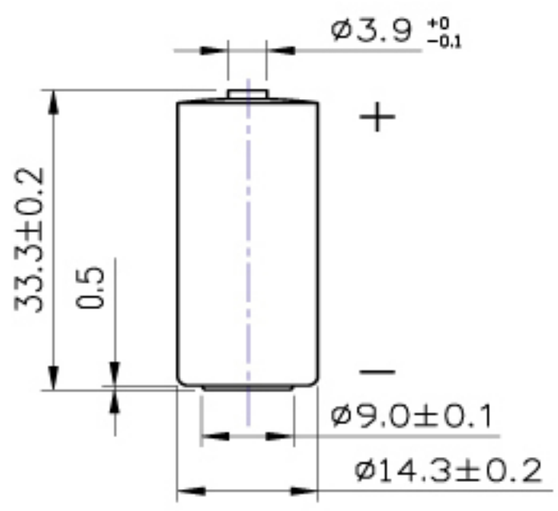


WARNING
Fire, Explosion And Severe Burn Hazard.
Do Not Recharge, Crush, Disassemble,
Heat Above 212°F(100℃), Incinerate
Or Expose Contents To Water

DISCHARGE CHARACTERISTICS AT +20°C

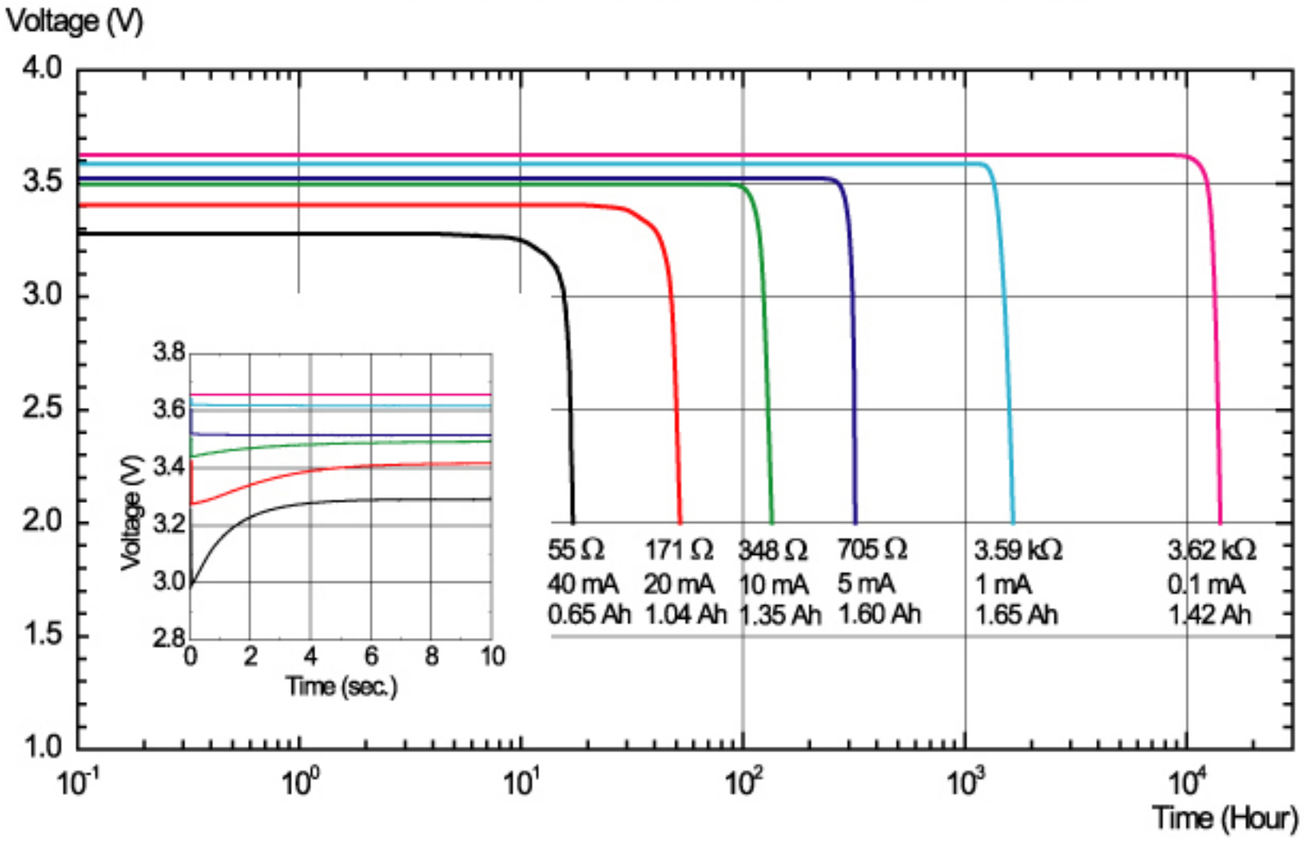


CAPACITY vs. CURRENT

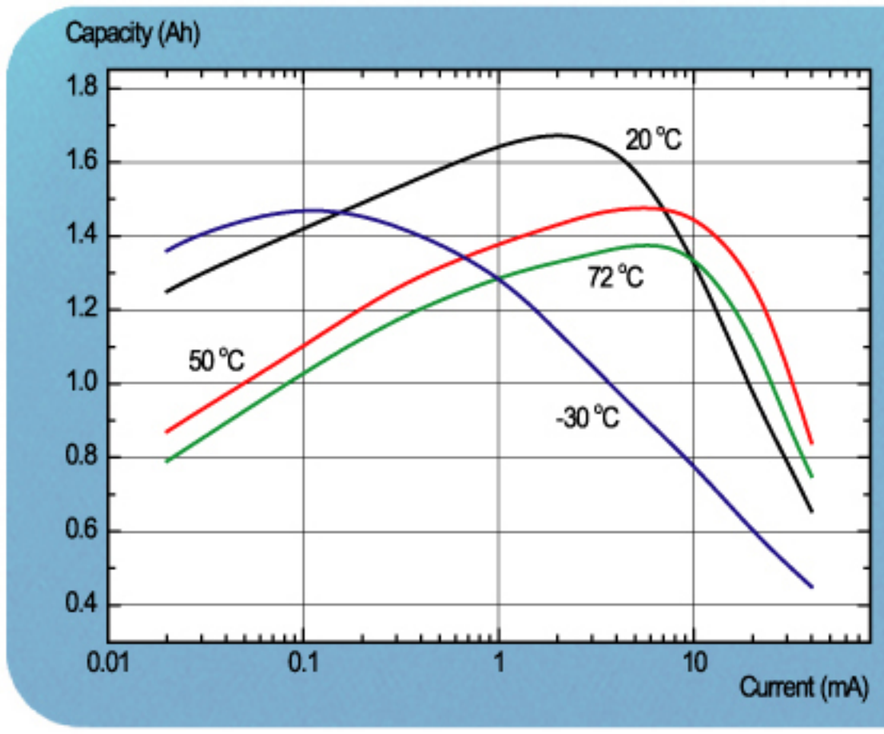


OPERATING VOLTAGE

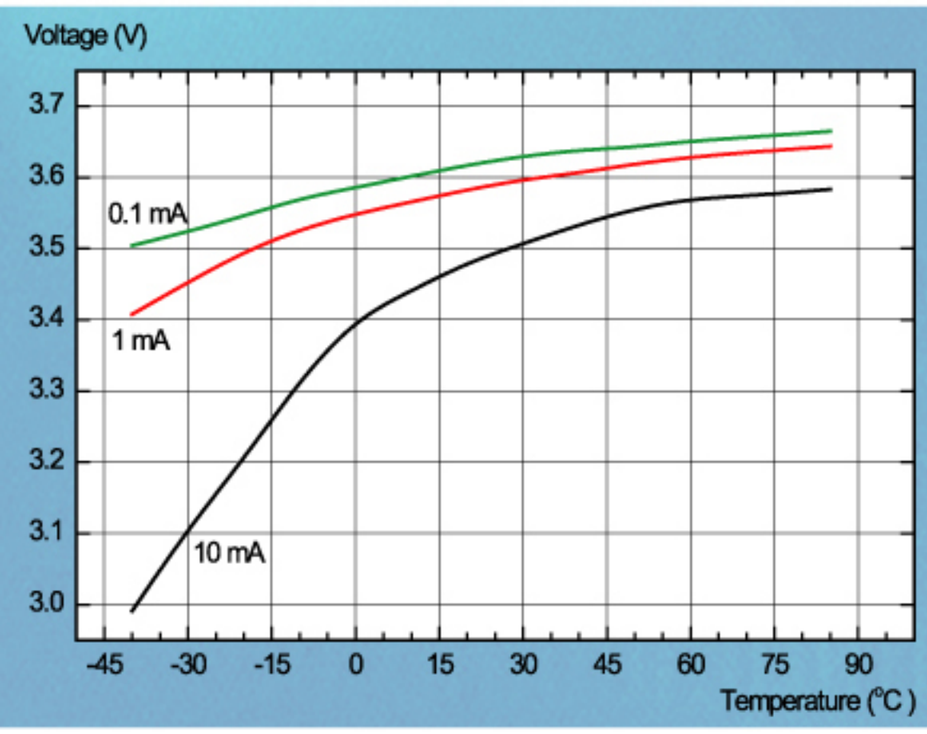




Any values in product catalogues are for informational purposes only.
They can also differ from actual conditions of usage and are not warranties of future performance.